burster

Press Load Cell
for hand and automatic operated presses

MODEL **8451**

Measuring ranges 0 ... 50 kN up to 0 ... 100 kN

Measuring ranges up to 0 ... 2 kN

Measuring ranges 0 ... 5 kN up to 0 ... 20 kN

Highlights
- Measuring ranges from 0 ... 500 N up to 0 ... 100 kN
- Non-linearity < 0,25 % F.S.
- Protection class IP65 / IP67
- Simplest mounting on press ram
- Robust construction with mechanical overload protection

Applications
- Forces in component joining
- Press-fitting
- Bending forces during material deformation
- Cutting forces when severing materia
- Forces during stamping processes
- Punching forces for blanks
- Break-out forces used in destructive testing

Product description
The Load cell model 8451 has been developed for measuring the forces that occur during press operation. The internal measuring elements have a rugged design, which mean they can cope reliably with the steep force curves that are typical of press applications. They can be fitted or replaced quickly and easily on the press ram without the need for additional components around them. The force sensor is placed between the tool and the press ram and can thus measure the actual compression force directly in the axis of operation.

The load cell measures the compression forces between the circular contact surfaces of plunger and tool. The pin on its top side and hole on its lower face are simply provided for mechanical fixing and centering the components correctly. The connecting cables are suitable for drag chains, designed for many movements and stably fastened in the sensor housing. Attachments are available which clamp onto the press sensors to enable easy mounting of displacement sensors according to the circumstances of use.

Technical Data

8451	–	5500	6001	6002	6005	6010	6020	6050	6100
Measuring range calibrated in N and kN from 0 ...		500 N	1 kN	2 kN	5 kN	10 kN	20 kN	50 kN	100 kN
		±112.4 lbs	±225 lbs	±450 lbs	±1.1 klbs	±2.25 klbs	±4.5 klbs	±11.25 klbs	±22.5 klbs
Accuracy									
Relative non-linearity*		≤ ±0.25 % F.S.			≤ ±0.35 % F.S.				
Characteristic curve deviation*		≤ ±0.5 % F.S.							
Relative hysteresis		≤ 0.75 % F.S.	≤ 0.50 % F.S.			≤ 0.75 % F.S.	≤ 0.50 % F.S.		
Temperature effect on zero output		≤ 0.02 % F.S./K			≤ 0.1 % F.S./K	≤ 0.05 % F.S./K	≤ 0.03 % F.S./K		
Temperature effect on nominal sensitivity		≤ 0.02 % F.S./K			≤ 0.1 % F.S./K	≤ 0.05 % F.S./K	≤ 0.03 % F.S./K		
Electrical value									
Sensitivity nominal		1.5 mV/V			0.35 mV/V	0.7 mV/V	1.5 mV/V	1.0 mV/V	1.2 mV/V
Measurement direction		Compression direction							
Standardization**		option 0.8 mV/V (±0.25 %)			not possible		option 0.8 mV/V (±0.25 %)		
Bridge resistance		350 Ω nominal (deviations are possible)							
Excitation		5 V DC (max. 10 V DC)							
Insulation resistance		> 30 MΩ at 45 V							
Environmental conditions									
Nominal temperature range		+15 °C ... +70 °C							
Operating temperature range		-20 °C ... +80 °C							
Mechanical values									
Deflection full scale	[µm]	< 50							
Maximum operating force		120 % of nominal load (after that overload protection takes effect)							
Max. static load capacity		2.5 kN	5 kN	10 kN	30 kN			75 kN	150 kN
Dynamic performance		recommended: 70 %							
Material		stainless steel 1.4542							
Protection class (EN 60529)		IP65			IP67				
Geometry		5500	6001	6002	6005	6010	6020	6050	6100
		see dimensional drawing							
Mounting									
Mounting fixing pin diameter	[mm]	Ø 10 e7						Ø 20 e7	
Mounting receiving hole diameter	[mm]	Ø 10 H7						Ø 20 H7	
Clamping screws for tool pin		M6						M8	
Mounting instructions		Force transmission between the circular contact surfaces (press ram/press tool). The pin and hole are used only for mechanical fastening and centric alignment (see dimensional drawing). Radial backlash of up to 0.9 ° is possible in the measuring ranges from 0 ... 500 N to 0 ... 2 kN.							
Other									
Natural frequency	[kHz]	> 2	> 3	> 5	> 20				
Mass	[g]	500			220			900	
General tolerance of dimension		ISO 2768f							

* The data in the area 20 % - 100 % of rated load

** Realized on board in connection cable, 1.7 m from sensor housing or 0.3 m from cable end (temperature range for the optional TEDS or standardization board 0 ... 60 °C)

4740-008451EN-5699-121537

Dimensional drawing 1 – **Measuring ranges from ≤ 0 ... 2 kN | from ≤ 0 ... 450 lbs**

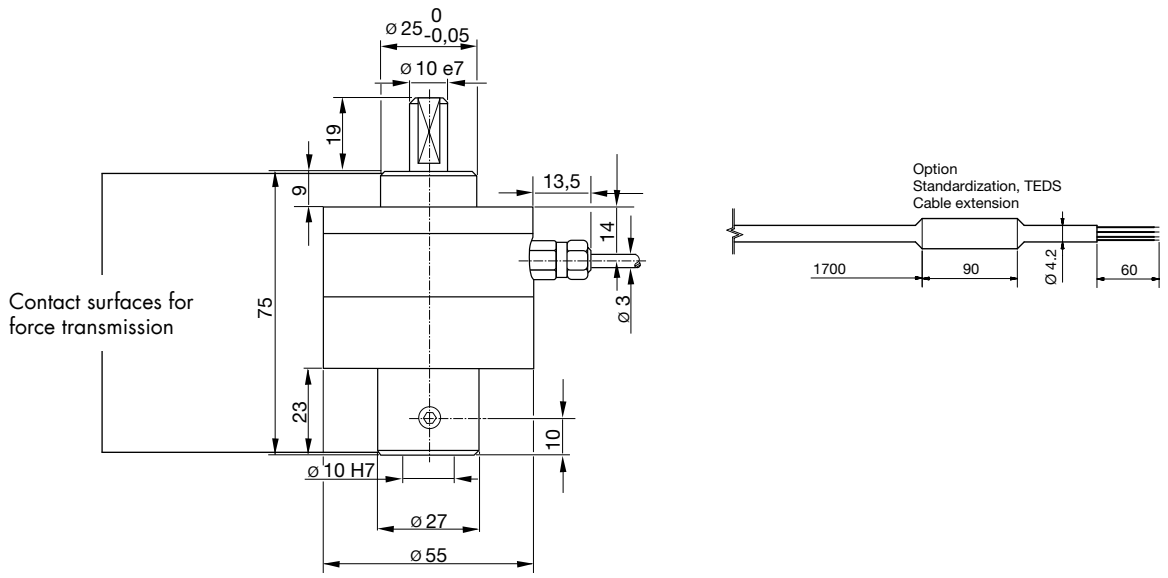

Dimensional drawing 2 – **Measuring ranges from ≥ 0 ... 5 kN up to ≤ 0 ... 20 kN | from ≥ 0 ... 1.1 klbs up to ≤ 0 ... 4.5 klbs**

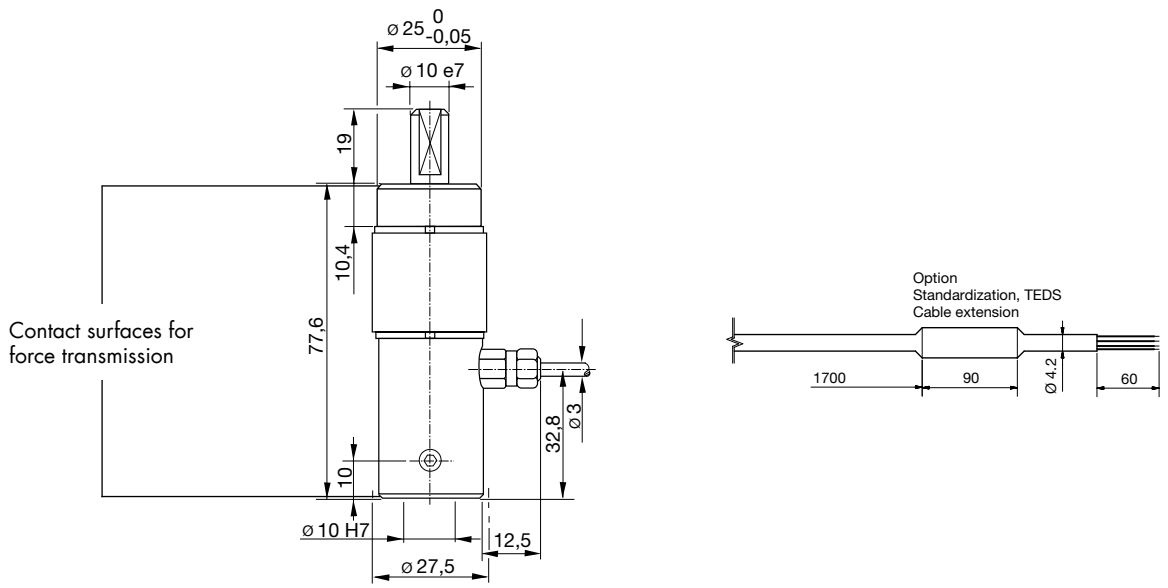

Dimensional drawing 3 – **Measuring ranges from ≥ 0 ... 50 kN | from ≥ 0 ... 11.25 klbs**

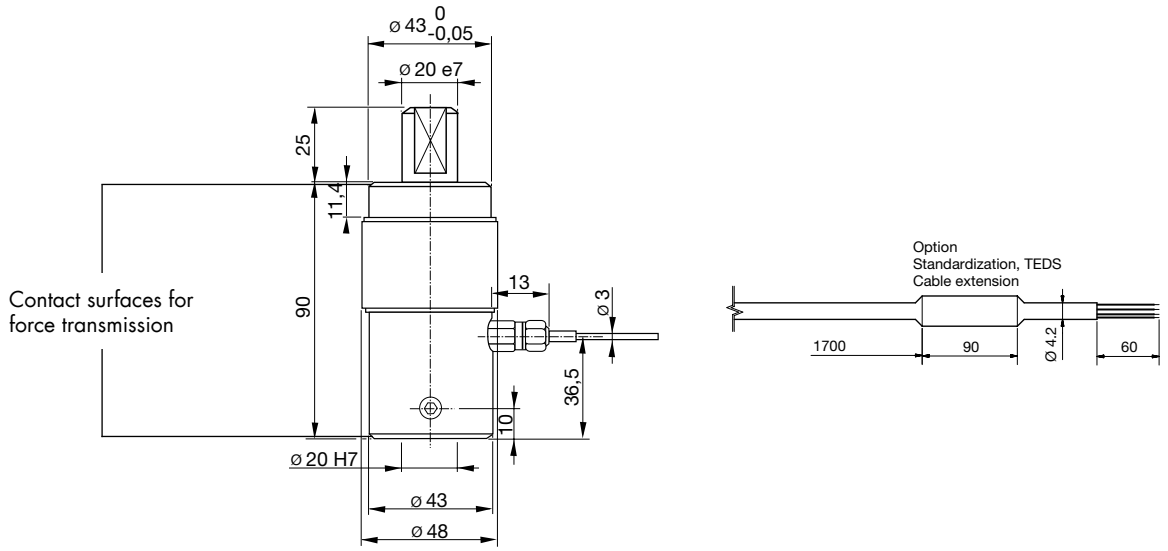

Electrical termination

Output signal

burster load cells are based on a strain-gage Wheatstone bridge. This measurement principle means that the output voltage mV/V is highly dependent on the sensor supply voltage. Our website contains details of suitable instrumentation amplifiers, indicator and display devices and process instruments.

burster TEDS

The "**burster** **T**ransducer **E**lectronic **D**ata **S**heet" (TEDS) is a memory in which identification data of the sensor, calibration data and other sensor parameters are saved. In conjunction with your own suitable burster device, there is the option of performing a simple adjustment in order to achieve the maximum accuracy of the measuring chain. A simple sensor exchange is thus possible in just a few steps without losing precision.

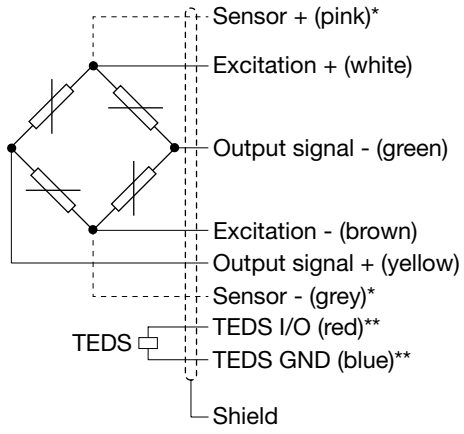

* only for extended cables of length 5 m or more
** option

8451	-	5500	6001	6002	6005	6010	6020	6050	6100
Measuring range from 0 ...		500 N	1 kN	2 kN	5 kN	10 kN	20 kN	50 kN	100 kN
Electrical termination									
Specifications		1.7 m, shielded, highly flexible, suitable for drag chains and robots, oil resistant Bending radius > 9 mm with fixed cable 30 mm with moving cable							
Cable model		PUR, Ø 3 mm, 4 x cable core 0.056 mm²							

Accessories

Connectors and units

Order code		
Connectors		
9941		Connectors 12 pin, suitable to all burster desktop units
9900-V209		Connectors 9 pin, suitable to SENSORMASTER, DIGIFORCE® and TRANS CAL
9900-V229		Connectors 9 pin with TEDS
9900-V245		Connectors 8 pin, suitable to ForceMaster
Displacement transducer		
8712-.../8713-...		Potentiometric displacement transducers
5501-Z002		Mounting of potentiometric displacement sensors of the 871x model series for 8451 to 20 kN
5501-Z003		Mounting of potentiometric displacement sensors of the 871x model series for 8451 from 50 kN
Units		
9110		ForceMaster 9110 - Monitoring for hand presses
9311/9307		DIGIFORCE® - Monitoring for hand presses + force and displacement monitoring
refer to section 9		Sensor electronics, amplifier and process control units like digital indicator model 9180, model 9163, modular amplifier model 9250

4740-008451EN-5699-121537

Examples

Example showing use of mounting parts to fit displacement sensor **Model 5501-Z002**

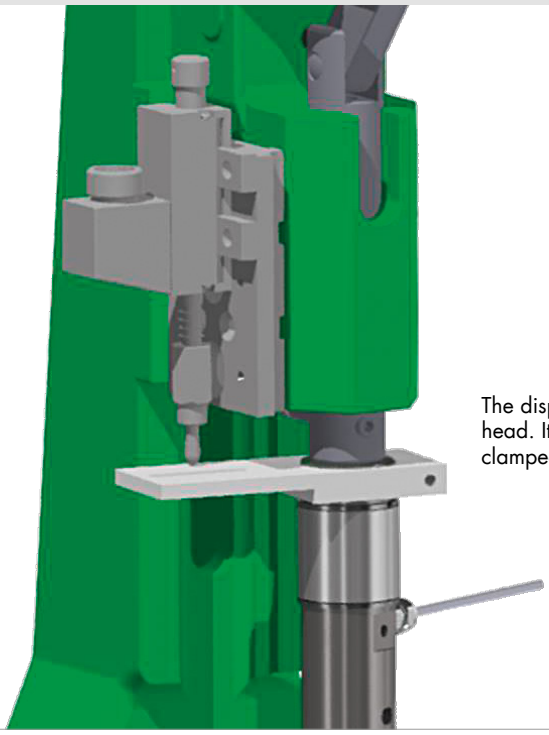

The displacement sensor is mounted on the press head. Its push rod rests on the bracket that is clamped onto the load cell.

Example of a measuring chain

Load cell	8451-6010-N0H0S000
Displacement sensor	8713-50
Connector plug	9900-V221
Fitting of plug	99005
Mounting parts	5501-Z002/5501-Z003
ForceMaster	9110-V0000

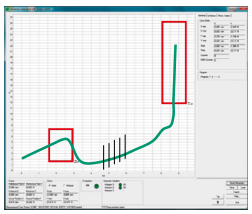

Analysis and configuration software 9110-P001

Mounting parts 5501-Z002

Mounting parts 5501-Z003

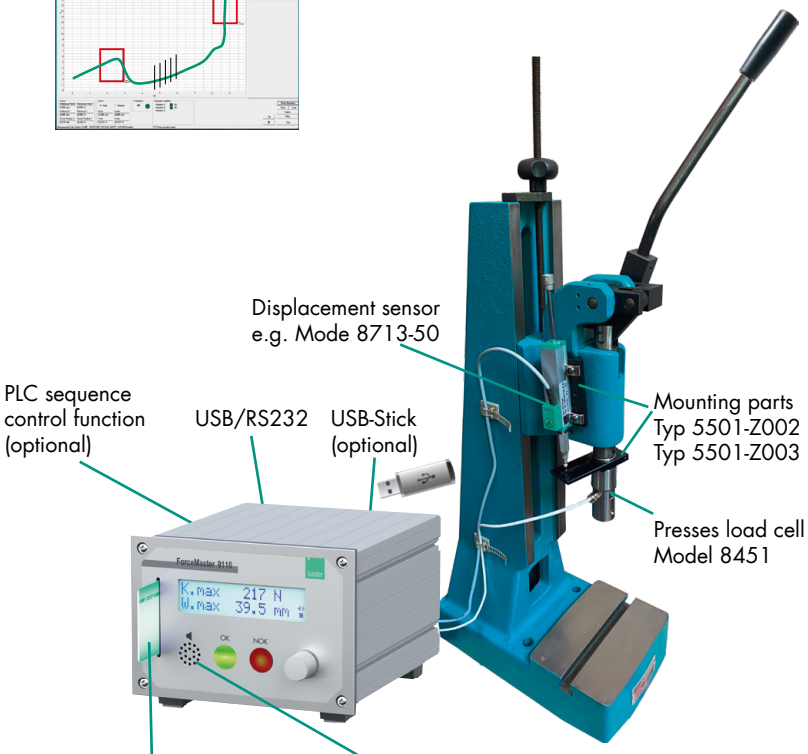

Calibration

Test and calibration certificate		
Supplied with the sensor		Amongst other data, includes figures for zero point, full-scale output and calibration offset
Standard factory calibration certificate for load cells or measurement chains (WKS)		
Optionally available		Our standard factory calibration is performed in 20% steps starting from zero until the reaching the nominal force, for increasing and decreasing load with unchanged installation position. Factory calibration is performed in the compression direction.
Special factory calibration certificate for load cells or measurement chains (WKS)		
On request		We are happy to calibrate sensors and measurement chains to the customer's specification.
Calibration certificate with accreditation symbol for product group load cell 8451		
Optionally available		Calibration certificate with accreditation symbol for load cells 8451. Calibration is performed on the basis of the accreditation of the calibration laboratory D-K-15141-01-00, for the scope of accreditation listed in the annex to the certificate. The traceability to national standards as well as a wide international recognition (DAkkS as signatory of the Multilateral Agreements of EA, ILAC and IAF) are thus guaranteed. Calibration is performed according to ISO 376 in 10 force steps (10% steps) vstarting from zero until the reaching the nominal force, for increasing and decreasing load under various installation positions.

4740-008451EN-5699-121537

Order Code

Measuring range	Code				Measuring range
0 ... 500 N	5	5	0	0	0 ... 112.4 lbs
0 ... 1 kN	6	0	0	1	0 ... 225 lbs
0 ... 2 kN	6	0	0	2	0 ... 450 lbs
0 ... 5 kN	6	0	0	5	0 ... 1.1 klbs
0 ... 10 kN	6	0	1	0	0 ... 2.25 klbs
0 ... 20 kN	6	0	2	0	0 ... 4.5 klbs
0 ... 50 kN	6	0	5	0	0 ... 11.25 klbs
0 ... 100 kN	6	1	0	0	0 ... 22.5 klbs

										Delivery ex stock at short notice					
										N	0	0	0	S	0	0	0
8	**4**	**5**	**1**	**-**					**-**				**0**	**S**		**0**	**0**

■ Nominal sensitivity/not standardized	N
■ Standardization at 0.8 mV/V (not possible for measuring ranges 0 ... 5 kN and 0 ... 10 kN)	B

■ Connection cable 1.7 m (with standardization in the cable 2 m)	0
■ Connection cable 1 m	C
■ Connection cable 3 m	F
■ Connection cable 5 m	G
■ Connection cable 3 m extended *	L
■ Connection cable 5 m extended * (with sens line)	M

* shortened delivery time compared with cable length 3 m and 5 m in one piece

■ Open cable ends + 6 cm single wires	0
■ 9 pins Sub-D connector model 9900-V209	B
■ 9 pins Sub-D connector model 9900-V209 for 9163-V3xxxx	E
■ 12 pins round connector model 9941 for burster desktop devices	F
■ 8 pins coupling connector model 9900-V245 with sensor datas for 9110-Vxxxx	H
■ 9 pins Sub-D connector with burster TEDS model 9900-V229	T

■ Non-linearity ≤ ±0.25 % F.S. up to ≤ ±0.35 % F.S. **	S

** The data in the area 20 % - 100 % of rated load F

■ Standard version	0

■ Nominal temperature range +15 °C ... +70 °C	0

Note

- **Brochure**
  Our brochure **„Load cells for production, automation, R&D and quality assurance“** is available for download on our website. It conatains numerous applications, detailed product specifications and overviews.

- **Product videos**
  Watch our **How-to-do video** at: **www.youtube.com/bursterVideo**

- **CAD data**
  Download via **www.burster.com** or directly at **www.traceparts.com**