T2

Thames Side

ALUMINIUM SINGLE POINT LOAD CELL

capacities 5kg - 50kg

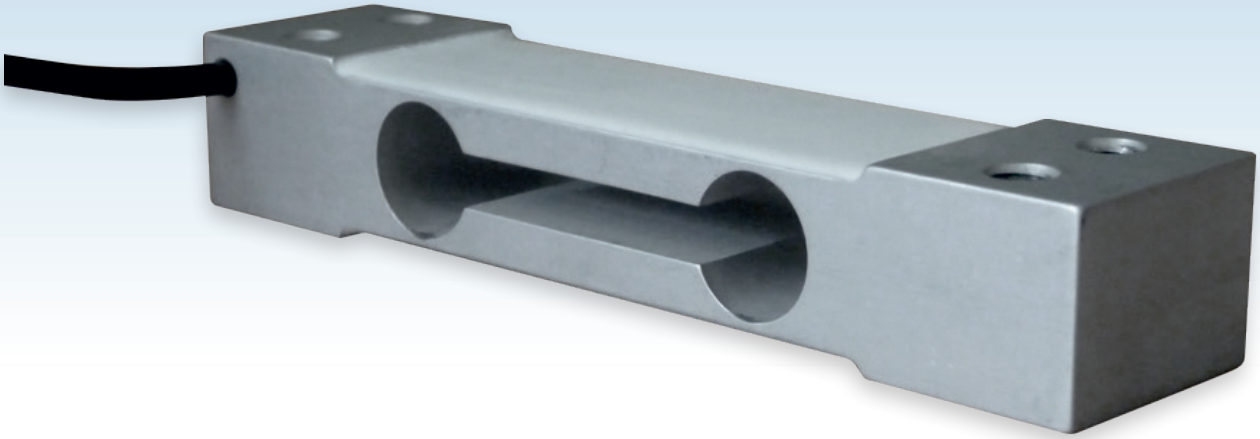

This double bending beam single point load cell is manufactured from high quality aluminium alloy. Its design allows for high accuracy weight measurement with off-centre loads. It's potted and sealed to IP66.

Typical applications include: single point platforms up to 350 x 350mm in size, small buckets and hoppers supported by a single load cell, small bagging & dosing machines as well as filling scales.

- High quality aluminium alloy load sensor
- High accuracy with off-centre loads
- Potted and silicone sealed to IP66
- Wide operating temperature range
- 3000 divisions performance
- 2 year warranty
- 350 x 350mm maximum platform size (load cell placed centrally under the platform)

T2

technical specification...

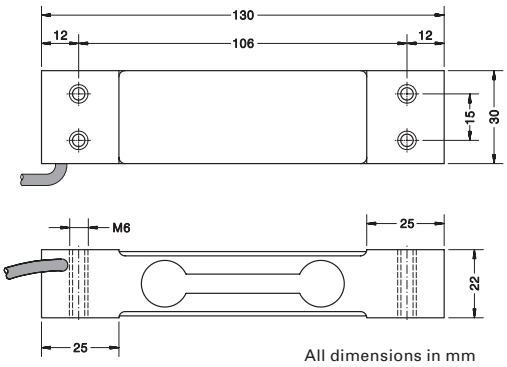

All dimensions in mm

T2 Load Cell

	Load cell specification		Units
Load Cell Capacity (E_{max})	5, 8, 10, 15, 20, 30, 50		kg
Rated Output (S_n)	2		mV/V ± 10 %
Combined Error	< ± 0.017		% S_n
Non-repeatability	< ± 0.01		% S_n
Minimum load cell interval (v_{min})	5kg capacity	0.7	g
	8kg capacity	1	
	10kg capacity	1.3	
	15kg capacity	1.9	
	20kg capacity	2.5	
	30kg capacity	3.8	
	50kg capacity	6.3	
Creep (30 minutes)	< ± 0.016		% S_n
Temperature Effect on Zero Balance	< ± 0.002		% S_n / ˚C
Temperature Effect on Span	< ± 0.0012		% S_n / ˚C
Compensated Temperature Range	-10 to +40		˚C
Operating Temperature Range	-20 to +70		˚C
Safe Overload	150		% E_{max} *
Ultimate Overload	200		% E_{max} *
Zero Balance	< ± 2		% S_n
Input Resistance	400		Ω ± 20
Output Resistance	350		Ω ± 3
Insulation Resistance	> 5000		MΩ @ 100V
Recommended Supply Voltage	5-15		V
Maximum Supply Voltage	15		V
Environmental Protection	IP66		-
Maximum deflection at E_{max}	0.3 - 0.5		mm
Cable Length	3		m
Cable Material	PVC		-
Nominal Shipping Weight	0.5		kg

* Load limit applies to central loads only. Load limit for off-centre loads will be lower.

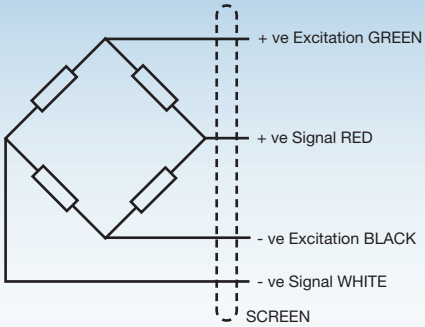

Electrical Connections

Via 4 core, 4mm diameter, screened PVC cable.
Screen not connected electrically to load cell.

Construction

Load cell manufactured from high quality aluminium alloy

DISTRIBUTED BY:

THAMES SIDE SENSORS LTD
Unit 10, io Trade Centre, Deacon Way,
Reading, Berkshire RG30 6AZ, UK
tel: +44 (0) 118 941 1387
fax: +44 (0) 118 941 2004
sales@thames-side.co.uk
www.thames-side.com

Issue: T2.02.20

Our policy is one of continuous product enhancement. We therefore reserve the right to incorporate technical modifications without prior notification.