T4

Thames Side

ALUMINIUM SINGLE POINT LOAD CELL

capacities 0.3kg - 3kg

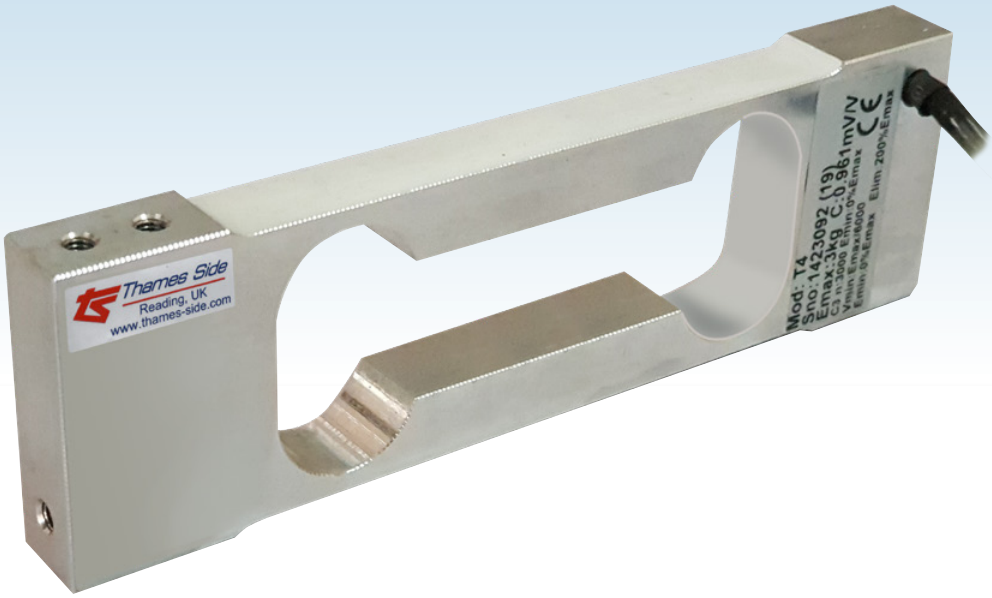

This double bending beam single point load cell is manufactured from high quality aluminium alloy. Its design allows for high accuracy weight measurement with off-centre loads. It's potted and sealed to IP66.

Typical applications include single point platforms up to 200 x 200mm in size, dosing machines as well as filling scales.

- High quality aluminium alloy load sensor
- High accuracy with off-centre loads
- Potted and silicone sealed to IP66
- Wide operating temperature range
- 3000 divisions performance
- 2 year warranty
- 200 x 200mm maximum platform size (load cell placed centrally under the platform)

T4

technical specification...

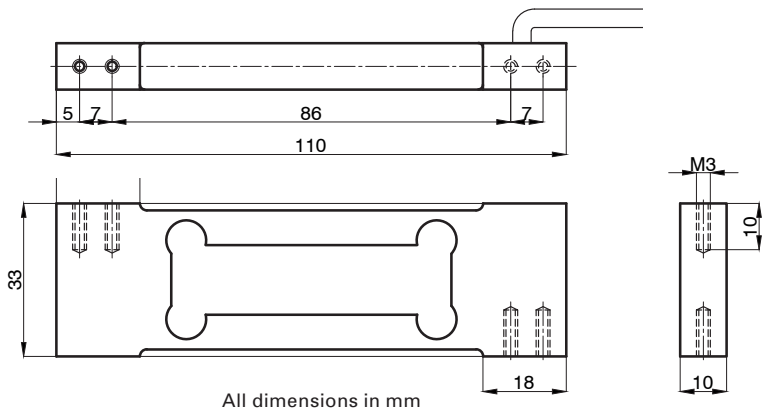

T4 Load Cell

	Load cell specification	Units
Load Cell Capacity (E_{max})	0.3, 0.6, 1.2, 3	kg
Rated Output (S_n)	0.9	mV/V ± 0.2 %
Accuracy class	3000	-
Combined Error	< ± 0.017	% S_n
Non-repeatability	< ± 0.01	% S_n
Minimum load cell interval (v_{min}) = E_{max} / Y	E_{max} / 6000	kg
Creep (30 minutes)	< ± 0.016	% S_n
Temperature Effect on Zero Balance	< ± 0.002	% S_n / °C
Temperature Effect on Span	< ± 0.006	% S_n / °C
Compensated Temperature Range	-10 to +40	°C
Operating Temperature Range	-20 to +70	°C
Safe Overload	150	% E_{max} *
Ultimate Overload	200	% E_{max} *
Zero Balance	< ± 2	% S_n
Input Resistance	400	Ω ± 20
Output Resistance	350	Ω ± 3
Insulation Resistance	> 5000	MΩ @ 100V
Recommended Supply Voltage	5-15	V
Maximum Supply Voltage	15	V
Environmental Protection	IP66	-
Maximum deflection at E_{max}	0.3 - 0.5	mm
Cable Length	0.4	m
Cable Material	PVC	-
Nominal Shipping Weight	0.15	kg

* Load limit applies to central loads only. Load limit for off-centre loads will be lower.

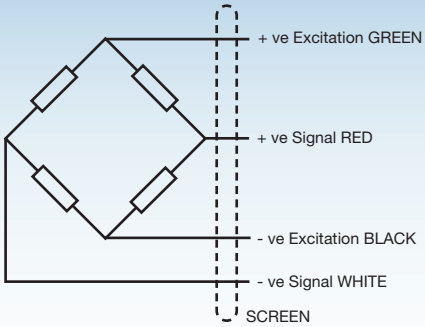

Electrical Connections

Via 4 core, 4mm diameter, screened PVC cable.
Screen not connected electrically to load cell.

Construction

Load cell manufactured from high quality aluminium alloy

DISTRIBUTED BY:

THAMES SIDE SENSORS LTD
Unit 10, io Trade Centre, Deacon Way,
Reading, Berkshire RG30 6AZ, UK
tel: +44 (0) 118 941 1387
fax: +44 (0) 118 941 2004
sales@thames-side.co.uk
www.thames-side.com

Issue: T4.02.20

Our policy is one of continuous product enhancement. We therefore reserve the right to incorporate technical modifications without prior notification.