COMPACT LOW PROFILE LOAD CELL

Compact Low Profile load cells are fully stainless steel, hermetically sealed load cells with a multi-beam internal structure, and fully integrated electronics to provide high level analog or digital outputs.

This type of load cell is easy to use for measuring tension or compression loads from 200N (50lb) to 5kN (1000lbf), and is capable of rejecting side forces that would otherwise affect accuracy. This type also offers the user the ability to set the gain and offset (span and zero) electronically, to provide maximum flexibility for the user application.

DIMENSIONS

CAPACITY (N)	CENTRE THREAD SIZE (THROUGH)	OUTER BOLT SIZE
100, 500	M8 x1.25	M6 Socket Head Screw
1000, 2000, 5000	M12 x1.75	M6 Socket Head Screw

CAPACITY (LBF)	CENTRE THREAD SIZE (THROUGH)	OUTER BOLT SIZE
50, 100, 200, 500, 1000	3/8-24 UNF-2B	¼" Socket Head Screw

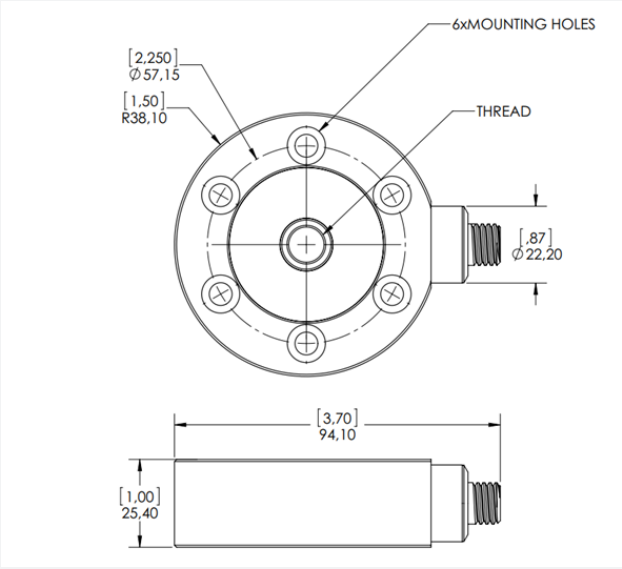

mm (inch)

COMPACT LOW PROFILE LOAD CELL

WIRING CODES

PIN	VOLTAGE OUTPUT	CURRENT OUTPUT	CAN	RS485	MV/V
1	Supply (+)	Supply (+)	Shield	Supply (+)	Supply (+)
2	Supply (-), TEDS GND	Supply (-), TEDS GND	Supply (+)	RS485_A	Supply (-)
3	Signal (+)	Current loop (+)	Ground	Ground	Signal (+)
4	Signal (-)	Current loop (-)	CAN_H	RS485_B	Signal (-)
5	TEDS DATA/Shunt calibration (Optional)	TEDS DATA/Shunt calibration (Optional)	CAN_L	Shield	N/A
6	Calibration interface A	Calibration interface A	N/A	N/A	N/A
7	Calibration interface B	Calibration interface B	N/A	N/A	N/A
8	Calibration interface C	Calibration interface C	N/A	N/A	N/A
M12 pin layout					

Consult the user manual for further details and recommended wiring schemes.

Copyright © HITEC Sensors 2020. This flyer is indicative only. Contact HITEC directly for details.

HITECSENSORS
A HUMANETICS COMPANY

COMPACT LOW PROFILE LOAD CELL

SPECIFICATION

PARAMETER	RANGE	NOTES
Rated Load	200, 500, 1000, 2000 & 5000N 50, 100, 200, 500 & 1000lbf	
Proof Load (%)	150 of rated load	No effect on calibration
Ultimate Load (%)	200 of rated load	No structural failure (deformation only)
Deflection (mm)	<0.05	Depends on rated load
Natural Frequency (Hz)	>1000	Depends on rated load
Output at Rated Load (RO)	1-9V or 4-20mA or CAN or RS485 or mV/V	Select when ordering
Non-Linearity (%)	<= 0.1 RO	
Hysteresis (%)	<= 0.1 RO	
Repeatability (%)	<= 0.03 RO	
Creep Over 20 Minutes (%)	<= 0.03 RO	
Output (Span) Tolerance (%)	Factory setting ±0.1 Range ±50 RO	Adjustable via electronic interface. See user manual for details
Offset (Zero Balance) (%)	Factory setting ±0.1 Range ±50 RO	Adjustable via electronic interface. See user manual for details
Output (Span) Temp. Coefficient (%)	±0.005 RO/°C	
Offset (Zero) Temp. Coefficient (%)	±0.005 RO/°C	
Compensated Temperature (°C)	-10 to +50	
Operating Temperature (°C)	-40 to +85	
Power Supply	12 to 24 VDC, <40mA	
Insulation Resistance	=>5 Gohm @ 50 VDC	ESD safe, EMC compliant with EN61326-2-3:2006, CE marked.
Connector	Analog O/P: 8-pin M12 male, hermetic Digital O/P: 5-pin M12 male, hermetic	Fully stainless steel construction, laser welded
Protection Class	IP68	
Weight (g)	750	
Bridge Resistance (ohms)	700 nominal	

Copyright © HITEC Sensors 2020. This flyer is indicative only. Contact HITEC directly for details.

COMPACT LOW PROFILE LOAD CELL

ORDER DETAILS

MODEL	CAPACITY (N)	DESCRIPTION
CLP	200	1 mV/V Output. With M12H connector (hermetic)
CLP	500	1 mV/V Output. With M12H connector (hermetic)
CLP	1,000	1 mV/V Output. With M12H connector (hermetic)
CLP	2,000	1 mV/V Output. With M12H connector (hermetic)
CLP	5,000	1 mV/V Output. With M12H connector (hermetic)
CLP	200	Amplified Output (4-20mA). With M12H connector
CLP	500	Amplified Output (4-20mA). With M12H connector
CLP	1,000	Amplified Output (4-20mA). With M12H connector
CLP	2,000	Amplified Output (4-20mA). With M12H connector
CLP	5,000	Amplified Output (4-20mA). With M12H connector
CLP	200	Amplified Output (1-9V). With M12H connector
CLP	500	Amplified Output (1-9V). With M12H connector
CLP	1,000	Amplified Output (1-9V). With M12H connector
CLP	2,000	Amplified Output (1-9V). With M12H connector
CLP	5,000	Amplified Output (1-9V). With M12H connector
CLP	200	Amplified Output (CAN/RS485). With M12H connector
CLP	500	Amplified Output (CAN/RS485). With M12H connector
CLP	1,000	Amplified Output (CAN/RS485). With M12H connector
CLP	2,000	Amplified Output (CAN/RS485). With M12H connector
CLP	5,000	Amplified Output (CAN/RS485). With M12H connector

Order details continued on next page.

Copyright © HITEC Sensors 2020. This flyer is indicative only. Contact HITEC directly for details.

COMPACT LOW PROFILE LOAD CELL

ORDER DETAILS CONTINUED

MODEL	CAPACITY (LB)	DESCRIPTION
CLP	50	1 mV/V Output. With M12H connector (hermetic)
CLP	100	1 mV/V Output. With M12H connector (hermetic)
CLP	200	1 mV/V Output. With M12H connector (hermetic)
CLP	500	1 mV/V Output. With M12H connector (hermetic)
CLP	1000	1 mV/V Output. With M12H connector (hermetic)
CLP	50	Amplified Output (4-20mA). With M12H connector.
CLP	100	Amplified Output (4-20mA). With M12H connector.
CLP	200	Amplified Output (4-20mA). With M12H connector.
CLP	500	Amplified Output (4-20mA). With M12H connector.
CLP	1000	Amplified Output (4-20mA). With M12H connector.
CLP	50	Amplified Output (1-9V). With M12H connector
CLP	100	Amplified Output (1-9V). With M12H connector
CLP	200	Amplified Output (1-9V). With M12H connector
CLP	500	Amplified Output (1-9V). With M12H connector
CLP	1000	Amplified Output (1-9V). With M12H connector
CLP	50	Amplified Output (CAN/RS485). With M12H connector
CLP	100	Amplified Output (CAN/RS485). With M12H connector
CLP	200	Amplified Output (CAN/RS485). With M12H connector
CLP	500	Amplified Output (CAN/RS485). With M12H connector
CLP	1000	Amplified Output (CAN/RS485). With M12H connector

HITEC Sensor Developments, Inc. | 10 Elizabeth Drive
Chelmsford, MA 01824 I United States of America
T +1 978 742 9032 I **F** +1 978 742 9033

hitecsensors.com

Copyright © HITEC Sensors 2020. This flyer is indicative only. Contact HITEC directly for details.

HITECSENSORS
A HUMANETICS COMPANY