OFF CENTER LOAD CELL TYPE L6B

APPLICATIONS:

Off center load cell type L6B can be used in small capacity weighing systems.
Some applications are:

- Small weighing platforms
- Hopper weighing, etc.

MAIN FEATURES:

- IP65
- Aluminium-Alloy
- Suitable for counting scales, balances, pricing scales
- Max Platform size 200x200 mm

NOMINAL LOAD: kg 0,3 – 0,4 – 0,5 – 0,6 – 1 – 3

Capacity	Accuracy	Part-Number
0,3 Kg	L/H	L6B-X-0.3Kg-0.4B
0,6 Kg	L/H	L6B-X-0.6Kg-0.4B
1 Kg	L/H	L6B-X-1Kg-0.4B
1,2 Kg	L/H	L6B-X-1.2Kg-0.4B
1,5 Kg	L/H	L6B-X-1.5Kg-0.4B
3 Kg	L/H	L6B-X-3Kg-0.4B

Accuracy class		L	H
Output sensitivity (= FS)	mV/V	0.9 ± 0.1	
Max. capacity (Emax)	Kg	0.3 – 0.6 – 1 – 1.2 – 1.5 – 3	
Linearity	%FS	≤±0,015	≤±0,012
Hysteresis	%FS	≤±0,015	≤±0,012
Repeatability	%FS	≤±0,015	≤±0,012
Temp. effect on Zero	%FS/10°C	≤±0,030	≤±0,020
Temp. effect on Sensitivity	%FS/10°C	≤±0,030	≤±0,020
Creep/DR (2 minutes)	%FS	≤±0,010	≤±0,005
Eccentric load cell	%	≤±0,020	
Safe overload	Of Emax	120%	
Ultimate overload	Of Emax	150%	
Zero balance	Ω	350±3	
Excitation recommended voltage	V	5 – 12	
Excitation max.	V	18	
Terminal resistance input	Ω	406 ± 6	
Terminal resistance output	Ω	350 ± 3.0	
Insulation impedance	MΩ	≥5000 (@50VDC)	
Temp. range compensated	°C	-10°C ~ +40°C	
Temp. range operating	°C	-20°C ~ +50°C	
Element material		Aluminium	
Ingress protection (according to EN 60529)		IP65	
Recommended Torque on fixation bolts	Nm	1.3	

CELMI s.r.l.
Largo Brugnatelli 13/16 20090 BUCCINASCO (MI) ITALY
Tel: +39-0245712209 / 0257503712 Fax: +39-0245705836 / 0257506211
Internet: www.celmi.com mail: info@celmi.com

Dimensions (in mm; 1mm = 0.03937 inches)

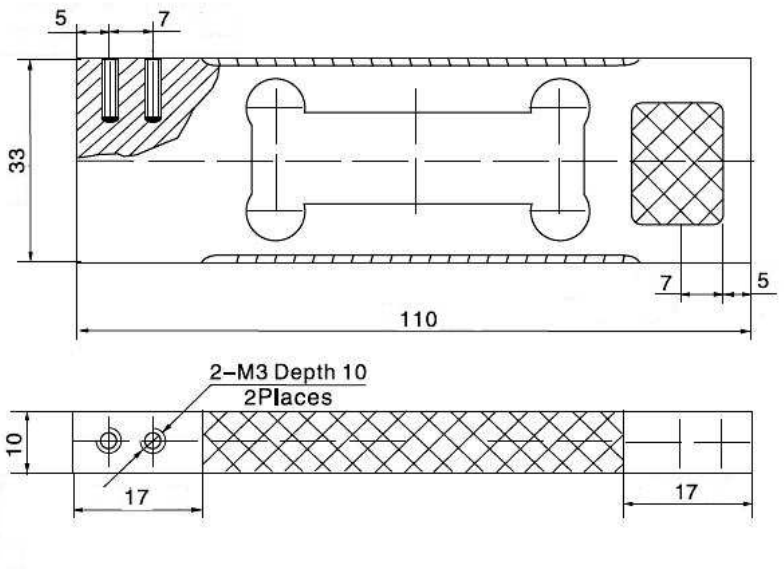

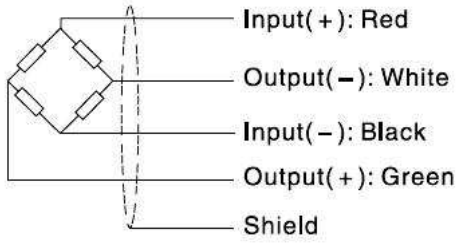

- Dimensions and specifications are subject to change without notice.

Wiring:

- Adopt a shielded ,4 conductor cable, and cable jacket is PVC.
- Cable length: 0.40±0.05m.
- Cable diameter: 3±0.2mm.