OFF CENTER LOAD CELL TYPE L6J1

APPLICATIONS:

Off center load cell type L6J1 can be used in small capacity weighing systems.
Some applications are:

- Small weighing platforms
- Hopper weighing, etc.

MAIN FEATURES:

- IP65
- Aluminium-Alloy
- Suitable for counting scales, balances, pricing scales
- Max Platform size 200x200 mm

NOMINAL LOAD: kg 0,3 – 0,4 – 0,5 – 0,6 – 1 – 3

Capacity	Accuracy	Part-Number
0,3 Kg	C3D	L6J1-C3D-0.3Kg-0.45B
0,4 Kg	C3D	L6J1-C3D-0.4Kg-0.45B
0,5 Kg	C3D	L6J1-C3D-0.5Kg-0.45B
0,6 Kg	C3D	L6J1-C3D-0.6Kg-0.45B
1 Kg	C3D	L6J1-C3D-1Kg-0.45B
3 Kg	C3D	L6J1-C3D-3Kg-0.45B

Accuracy class		C3D
Output sensitivity (= FS)	mV/V	1.0 ± 0.1
Max. capacity (Emax)	Kg	0.3 – 0.4 – 0.5 – 0.6 – 1 – 3
Max. number of load cell intervals		2500
Ratio of minimum LC verification interval		5000
Combined error	%FS	± 0.0280
Safe overload	Of Emax	150%
Ultimate overload	Of Emax	300%
Zero balance	Of FS	<±2.0%
Excitation recommended voltage	V	5 – 12
Excitation max.	V	18
Terminal resistance input	Ω	394±6
Terminal resistance output	Ω	350±3
Insulation impedance	MΩ	≥5000 (@50VDC)
Temp. range compensated	°C	-10°C ~ +40°C
Temp. range operating	°C	-30°C ~ +65°C
Element material		Aluminium
Recommended Torque on fixation bolts	Nm	1.3
Ingress protection (according to EN 60529)		IP65

CELMI s.r.l.
Largo Brugnatelli 13/16 20090 BUCCINASCO (MI) ITALY
Tel: +39-0245712209 / 0257503712 Fax: +39-0245705836 / 0257506211
Internet: www.celmi.com mail: info@celmi.com

Dimensions (in mm; 1mm = 0.03937 inches)

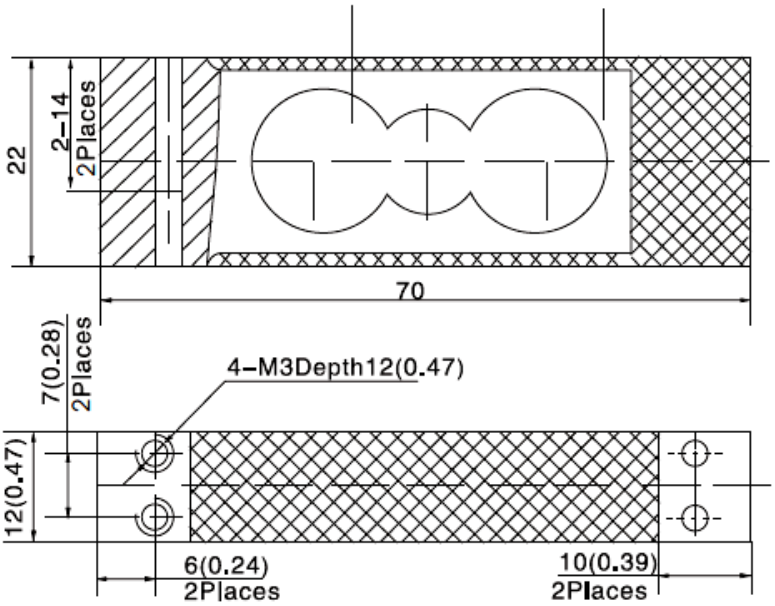

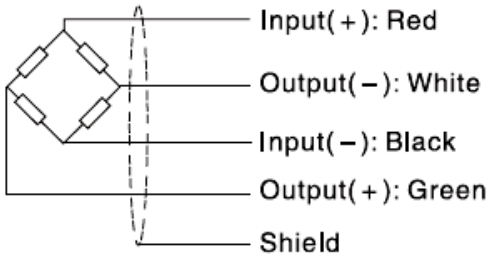

· Dimensions and specifications are subject to change without notice.

Wiring:

· Adopt a shielded, 4 conductor cable, and cable jacket is PVC.
· Cable length: 0.45 ± 0.05m.
· Cable diameter: 3.0 ± 0.2mm.
· Shield not connected to element.