MINIATURE COLUMN LOAD CELL

Miniature Column Load Cells are designed for high capacity compression applications. This type is offered in stainless steel with a raised surface radius to overcome off centre loading.

WIRING

- The sensor is provided with a #32 AWG 4-conductor braided shielded cable with an outer jacket of 0.087" [2.2 mm] diameter, 5 ft [1.5m] long, with no connection between the shield and the sensor body. For additional protection, the cable is contained within a stainless steel spring for strain relief purposes for the first 1" [25 mm].

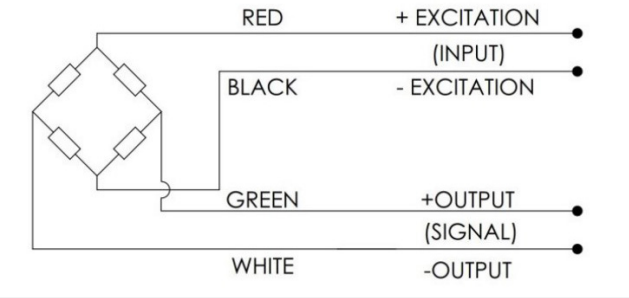

- Connector pin configuration as shown below (for the with-connector version)

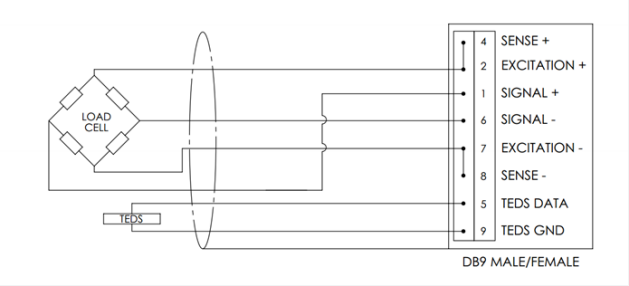

DIMENSIONS

CAPACITY (LBF)	CAPACITY (KN)	D1 (MM)	H (MM)	L (MM)	R (MM)
2k, 5k	10, 25	.62 (15.9)	.65 (16.5)	.59 (15)	4 (101.6)
7.5k, 10k	50	.88 (22.4)	.88 (22.4)	.77 (19.6)	4 (101.6)
15k, 30k	100	1.25 (31.8)	1.13 (28.7)	1.06 (26.9)	5 (127)

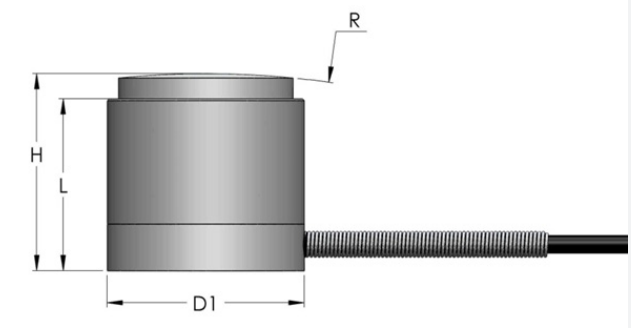

MINIATURE COLUMN LOAD CELL

SPECIFICATION

PARAMETER	RANGE	NOTES
Capacity (lbf)	2K, 5K, 7.5K, 10K, 15K, 30K	
Capacity (kN)	10, 25, 50, 100	
Sensitivity (mV/V)	2 nominal	
Safe Overload (%)	150 FS	No effect on performance
Zero Signal Error (%)	±1 FS	
Hysteresis (%)	±1 FS	
Linearity Error (%)	±1 FS	
Zero Temperature Coefficient (%)	0.02 FS/°C	
Span Temperature Coefficient (%)	0.02 of load/°C	
Compensated Temperature (°C)	-15 to +70	Wider range available to order
Operating Temperature (°C)	-20 to +70	Wider range available to order
Output Resistance (ohms)	350 nominal	
Input Resistance (ohms)	350 nominal	
Excitation (V)	18 max.	
IP Rating	IP64	
Material	Stainless Steel	

HITEC Sensor Developments, Inc. | 10 Elizabeth Drive
Chelmsford, MA 01824 I United States of America
T +1 978 742 9032 I **F** +1 978 742 9033

hitecsensors.com

Copyright © HITEC Sensors 2020. This flyer is indicative only. Contact HITEC directly for details.

HITECSENSORS
A HUMANETICS COMPANY