MINIATURE S-BEAM OVERLOAD PROTECTION LOAD CELL

The Miniature S-Beam Load Cell is a bi-directional Aluminium strain gauge based transducer with high performance and built-in temperature compensation.

This design provides better than ±0.05% (full scale) non-linearity and includes overload protection in both tension and compression directions.

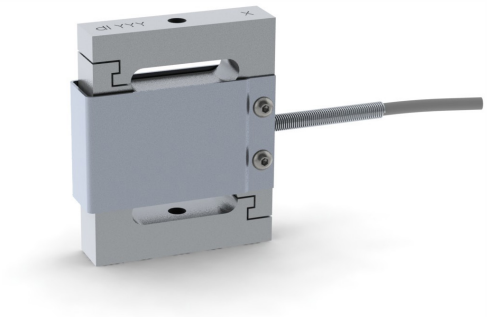

WIRING

- Cable Version
  The S-beam load cell is provided with 4x28 AWG wiring within a braided shielded cable (overall cable length 2m)

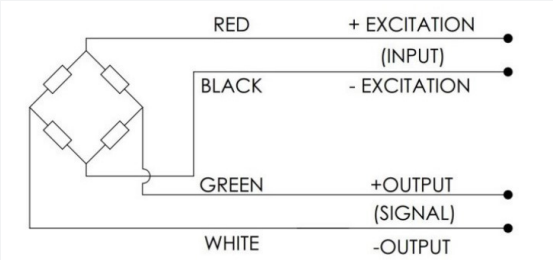

- Lemo Version
  Connector pin configuration as shown below (for the with-connector version)

PIN	WIRING CODE
1	+ EXCITATION
4	- EXCITATION
2	+ SIGNAL
3	- SIGNAL

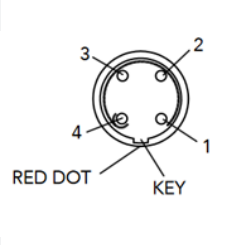

DIMENSIONS

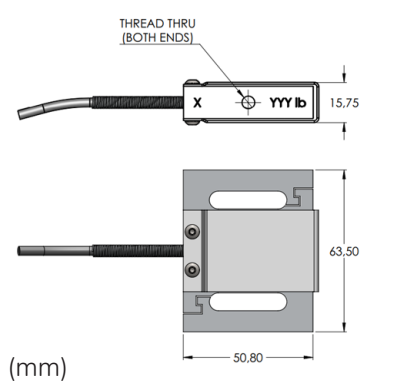

MODEL	CAPACITY	THREAD
MSBLC-2M-P	25	M6 x 1
MSBLC-2U-P	25	1/4 - 28
MSBLC-2M-P	50	M6 x 1
MSBLC-2U-P	50	1/4 - 28
MSBLC-2M-P	100	M6 x 1
MSBLC-2U-P	100	1/4 - 28
MSBLC-2M-P	250	M10 x 1.5
MSBLC-2U-P	250	1/4 - 28

SPECIFICATION

PARAMETER	RANGE
Rated Capacity (lbf)	25, 50, 100 & 250
Rated Output (RO) (mV/V)	2 nominal
Overload (%)	1000 of RO
No Load Offset (%)	±1 of RO
Excitation (VDC or VAC) (V)	5, 10
Input Impedance	1000 Ω nominal
Output Impedance	1000 Ω nominal
Non-Linearity (%)	±0.05 of RO
Hysteresis (%)	±0.05 of RO
Non-Repeatability (%)	±0.05 of RO
Temperature Shift Zero (%)	±0.005 of RO/°F (±0.009 of RO/°C)
Temperature Shift Span (%)	±0.01 of load/°F (±0.018 of load/°C)
Compensated Temperature (°F)	+5 to +160 (-15 to +71°C)
Operating Temperature (°F)	-60 to +200 (-51 to +93°C) – Lemo Version +5 to +176 (-15 to +80°C) – Cable Version
Weight (lb)	0.3 (140g) approx.
Material	Aluminum
Deflection (in)	.004 to .010 [0.1mm to 0.25mm] nominal
IP Rating	IP40
Calibration Test Excitation (V)	5 (recommended), 10 max.
Calibration (std.)	5 pt. tension

HITEC Sensor Developments, Inc. | 10 Elizabeth Drive
Chelmsford, MA 01824 I United States of America
T +1 978 742 9032 I **F** +1 978 742 9033

hitecsensors.com

Copyright © HITEC Sensors 2020. This flyer is indicative only. Contact HITEC directly for details.

HITECSENSORS
A HUMANETICS COMPANY